HAIGH

Waste Water Experience & Innovation

ACE Packages™

Screenings Handling

www.haigh.co.uk

HAIGH

Waste Water Experience & Innovation

ACE Packages™

Screenings Handling

ACE Packages™ treat wastewater screenings from screens of any size and manufacture.

ACE Packages™ process screenings from raw sewage screens efficiently and effectively. The process takes raw screenings from the screen launder flow, washes and separates the faecal matter and compacts the remaining screenings as a clean dry product ready for disposal as 'ACE Screenings'.

Decontamination factor >100 for the removal of faecal matter from screenings*

*Results of independent analysis

ACE Packages™ return the faecal organic matter into the main sewage flow for biological treatment, generate improved sludges and prevent the starvation of biological filters.

The flexible ACE Packages™ can be used in conjunction with fine or coarse screens. The modular design allows engineers to integrate the package into any site layout. This means the disposal point or skip can be in the most convenient location for removal, and overall plant footprint minimised.

Estimates for screening disposal costs range from £100 to £200 per tonne. The substantial reduction in the volume of screenings produced by ACE Packages™ requires fewer skip movements and lowers whole life costs when compared with alternatives. With increasing landfill costs and legislative requirements this ensures cost savings.

Waste Water Experience & Innovation

ACE Packages™

Reduction of whole life cost

ACE Packages™ reduce the volume of wet screenings by up to 95% - This is between 4 and 6 times the reduction offered by washing and compacting systems compared with published competitor data.

Like for like skip removal and disposal costs are as low as 1/6th of the alternative solutions. There is also the potential to save on wash water pumps and associated costs.

- High performance washing and dewatering
- Flexibility built-in as standard
- Compatible with any screens
- Better sludges
- Backed up with Haigh product support
- Lower whole life cost

Approximate skip removal rate per month based on a 50k population

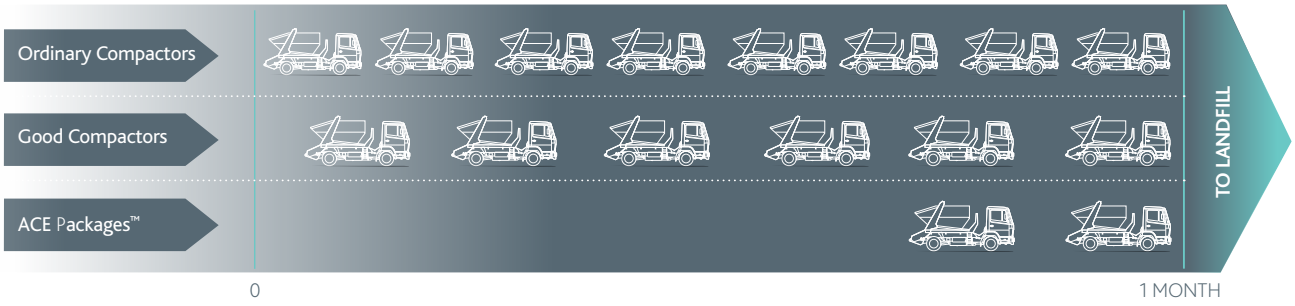

Better Process = **Less Skip Movements = Lower whole life cost**

Waste Water Experience & Innovation

ACE Packages™

Screenings Handling

Layouts and Orientation:

ACE Packages™ are designed as a dual module system; comprising a washing stage and a liquid separator / compaction stage.

Washed and homogenised screenings are pumped from the washing stage to the liquid separators, allowing for a more convenient skip location without extensive launder or conveyor systems from the screen to the screenings handling plant. Numerous flexible configurations of inlet works and building layouts can be accommodated using duty, duty / standby or duty / assist operating configuration.

Performance:

- Compacted screenings can be as high as 40% dry solids.
- Decontamination factor >100 for removal of faecal matter from screening*
  **results of independent analysis.*
- Up to 95% volume reduction
- Improved Sludges
- Improved downstream process performance
- Outputs clean, odour free 'ACE Screenings'
- Compliant with Landfill Directive.

Grit Protection:

Fine screens located upstream of traditional grit traps will draw stones and grit out of the raw sewage flow.

ACE Packages™ incorporate a grit protection system to minimise the impact on the system and reliability of the plant, as well as increase overall plant lifetime. Additionally, wear components are designed with ease of maintenance and value in mind.

Manual grit removal via a bund is provided as standard. Automatic grit removal options are available for sites with high grit levels.

Control Systems:

ACE Package™ control systems are preconfigured with a standard set of operating variables. The system is self-regulating in order to accommodate variable wash water supply, for example during storm flows. Haigh can also design and produce bespoke electrical control panels to custom specifications. Packages can be supplied either with or without integrating control systems.

Typical elements of the ACE Package™

- Screenings Conditioning Tank
- Solids conditioning / pumping unit
- Grit protection system
- Liquid Separator / Compactor unit
- Integrated Control Panel System
- Distribution Tanks for Multiple Units increasing flexibility and performance.

The Haigh Distribution Tank offers flexibility to meet your needs, rather than compromise on operational dynamics and site layout.

Distribution Tanks

Distribution tanks separate out grit and sludgy materials from rag and other inorganic screenings.

Improved flow of screenings to the Lisep ensures the end product is more homogenous, lower in volume and mass and is very clean. This makes the screenings more acceptable for landfill and virtually eliminates screenings odour on site.

Distribution tanks provide an opportunity to re-use wash water. In some cases it is possible to operate without additional wash water, even in a storm. If normal wash water already comes from the inlet screens, then the screenings handling system can be considered a ZERO wash water system.

Distribution tanks behave like dosing chambers for Liseps. In practical terms the process link between Macipump and Lisep is severed. So control options are increasingly flexible. Liseps receive flows via valves to provide duty/assist and standby. A distribution tank enables sludge to be drawn off before reaching the Liseps, thereby maintaining a cleaner end product.

- Reduced screenings output results in overall lower disposal costs.
- Grit separation reduces wear and whole life costs
- A Distribution Tank allows for a Zero Washwater system, reducing operating cost
- Lisep Maintenance intervals can be extended.

Experience in the field shows that Lisep screens and rotors that take screenings from Distribution Tanks are virtually wear free, even after a number of years in operation. A component life expectancy of over 3 years is reasonable.

Haigh provides a 3 year parts exchange warranty on rotors and screen sets for Liseps that are fed from distribution tanks.

Lisep screens are also cleaner with less hole binding, so service intervals can be extended significantly, again reducing whole life operational costs.

HAIGH

Waste Water Experience & Innovation

"The Haigh ACE Packages™ treat wastewater screenings from screens of any size and manufacture"

Stone & Coarse Grit Removal

- Settlement / removal of stones/coarse grit
- Manual option via collection bund
- Automated option returning grit and stones to the inlet channel for processing by the works grit removal plant
- Offline process, no moving parts in the main flow
- Reduced wear and extend plant life.

Screenings Conditioning

- Highly effective proven cutting action gives controlled particle size
- Strong agitation, provides homogeneous solids in suspension
- Cutters can be changed within minutes with perfect alignment
- No special tools required
- Enables flexibility in location of liquid separation and compaction phase.

Flow Distribution

- Distribution tank option provides settlement and removal and gives cleaner, lower mass screenings providing lower disposal costs
- Grit tank option provides settlement and removal of fine grit
- Fine Grit removal protection for liquid separation and compaction phase
- Provides true Duty / Standby Capability for Macipumps and Lisep / Lipactors.

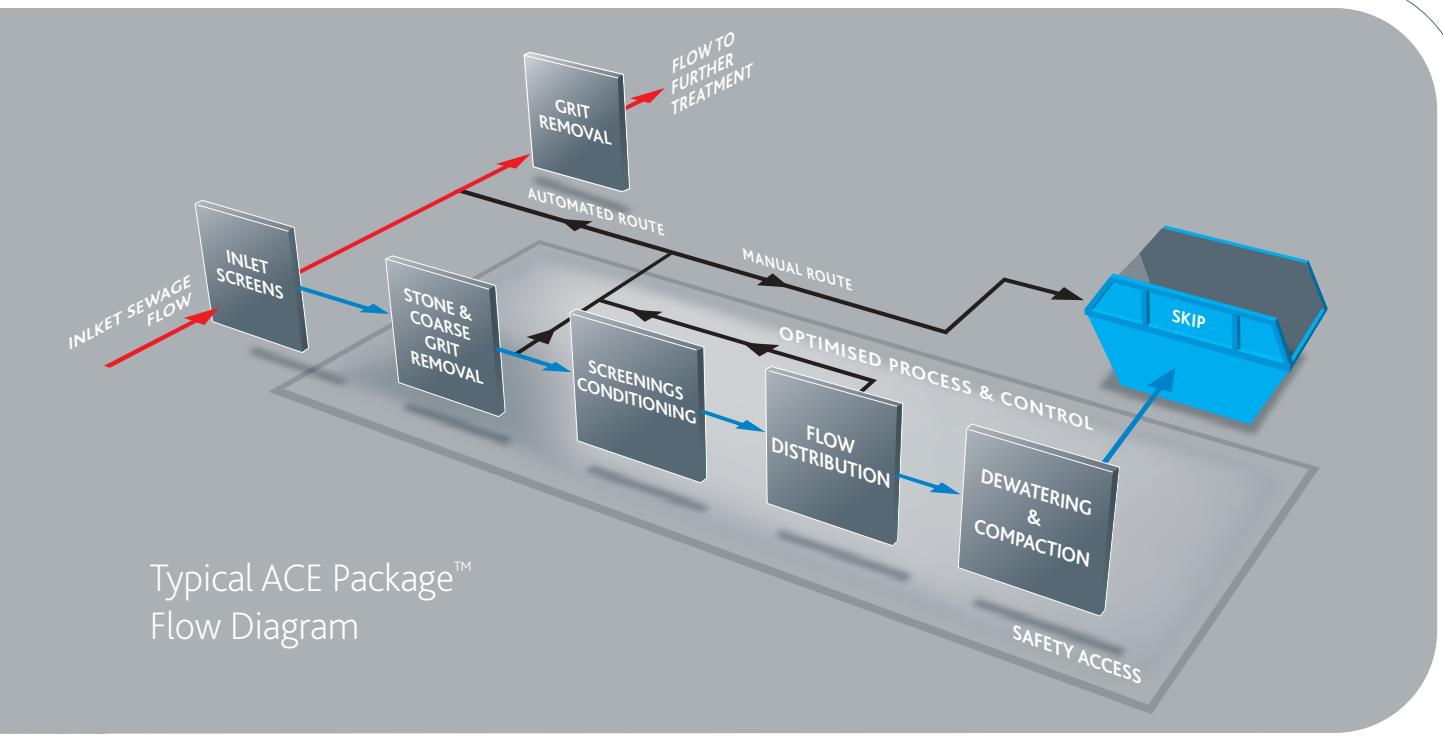

Typical ACE Package™ Flow Diagram

Liquid Separation and Compaction

- High performance reliable Lisep and Lipactor units
- Washed, clean and compacted 'ACE Screenings'
- Maximum organics returned to the flow to improve downstream processes
- Superior volume reduction
- Reduce site traffic and skip transportation
- Skip location is flexible.

Electrical Control

- Pre-wired
- Pre-tested
- MCC kiosk or Local Control boxes available.

Health, Safety and Access

- Standardised access platforms
- Health and Safety designed in from the ground up
- Maintenance tasks simplified.

Waste Water Experience & Innovation

ACE Package Range

Information

Product overview

There are 4 basic models in the range, 750, 1000, 1500 and 2000 with capacities to handle wet screenings from 6mm fine screens as detailed in the table below.

Wet screenings, as removed by a 6mm perforated hole screen are generally accepted as containing 85% water and 15% dry solids.

	Model			
Basic sizing - ACE Package model (Using duty Macipumps)	750	1000	1500	2000
Capacity range of wet screenings (M^3/hr) plant can handle from 6mm fine screens	0.3 - 1.5	1.6 - 3.5	3.6 - 7.0	7.1 - 10

	Model			
Basic sizing - ACE Package model (Using duty/standard Macipumps)	750	1000	1500	2000
Capacity range of wet screenings (M^3/hr) plant can handle from 6mm fine screens	0.5 - 2.0	2.1 - 4.0	4.1 - 8.0	8.1 - 12

Higher throughput can be designed with multiple modules.
Speak to us about your larger projects.

Features and Benefits

- All models can have duty, duty / standby or duty / assist elements
- All models provided with manual or automated primary grit removal at the conditioning tank
- All models have grit settlement prior to the Lisep element either in the form of a grit tank or a distribution tank
- Control panel options available.

Haigh Sales and Service backup

We're happy to get our hands dirty....

Haigh has a UK wide dedicated sales force who specialise in knowing how to bring added value to your works such as reducing civil costs, eliminating the need for site washwater, and at the same time cutting screenings skip and transport costs.

Your local Sales Manager will be pleased to discuss your particular requirements and options for Haigh equipment to suit your works. If you decide to proceed with a Haigh installation a dedicated Contracts Engineer will be appointed to your project to oversee it from start to finish.

In-house 3D modelling

Most new or existing installations will require some kind of design input for layout and services positioning and the in-house design team will produce bespoke drawings for approval.

Additional nationwide service backup is available to keep your installations working throughout it's life at optimum efficiency. Service Contracts can be arranged to periodically check equipment and advise on preventive maintenance. We endeavour to keep your Haigh equipment working at optimum performance, cost effectively for years to come.

Working with Haigh

Haigh has a Contracts Department which is dedicated to providing customer service. Design of individual projects is handled by staff who are fully conversant with Haigh products and give individual advice and support. Installation is undertaken by factory trained engineers and electricians who have in many cases served their apprenticeships with Haigh.

Haigh has a purpose built factory with the latest technology. 3D Computer Aided Design is complemented by sheet steel laser cutters, precision folding and robotic welding.

24hr Strategic Spares Supply, Service Exchange, Framework and Non-Framework arrangements.

"Installation can be undertaken by Haigh trained engineers and electricians who have in many cases served their apprenticeships with the company."

Waste Water Experience & Innovation

www.haigh.co.uk

It is the policy of our company to continually improve our products and accordingly we reserve the right to alter specifications and appearance without notice.

E3199/0110

The Haigh Engineering Company Limited
Alton Road, Ross-on-Wye, Herefordshire HR9 5NG

Tel: 01989 763131
Fax: 01989 566276

info@haigh.co.uk

The pulp used for manufacturing this paper is from mills that are certified to ISO 14001. ECF pulp sourced from sustainable forests.

BRITISH WATER
expertise worldwide

HAIGH

ACE Pactor
300

Waste Water Experience
& Innovation

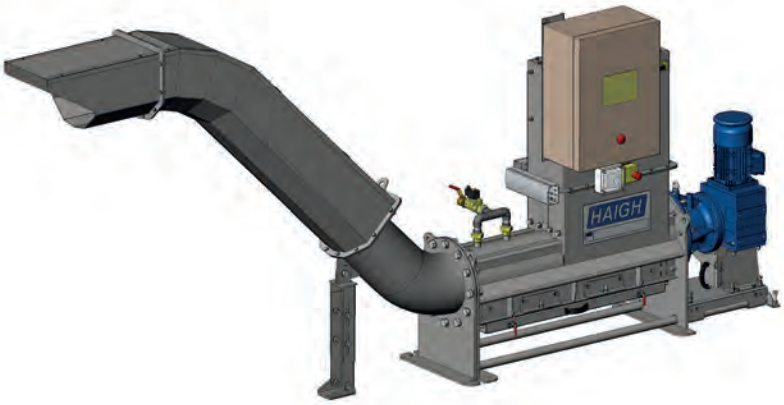

www.haigh.co.uk

ACE Pactor
300

Waste Water Experience
& Innovation

ZERO WASH WATER SCREW COMPACTOR PROVIDING LOW WHOLE LIFE COST WITH BENEFIT OF OFFSITE FABRICATION & EASE OF MAINTENACE.

The ACE Pactor 300 has been designed to process screenings from any inlet screen and can handle up to 8 l/s of launder wash water. Control is via ultrasonic level transducer ensuring the unit only runs when there is adequate screening material present, this results in short operating times and low whole life costs.

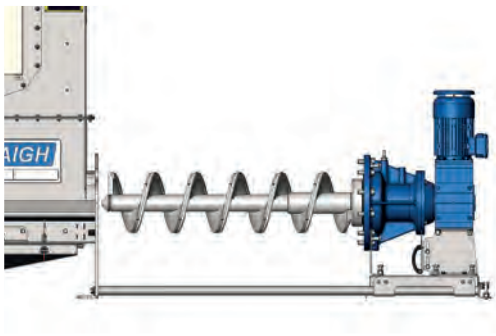

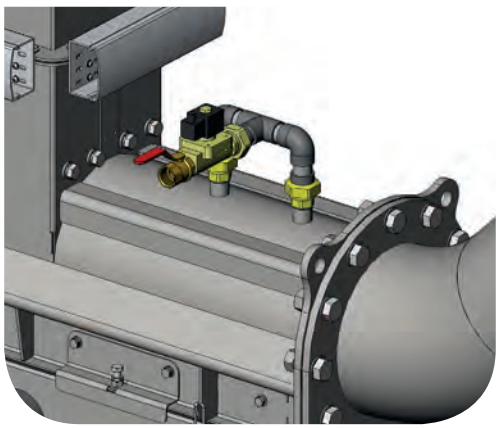

FEATURES AND BENEFITS

Overview

- Compliant with WIMES 6.03
- Robust stainless steel fabrication
- All maintenance carried out in situ
- Off site build - true 'plug and play' concept.

Operation

- Large integral drainage deck able to deal with up to 8 l/s of launder wash water
- Heavy duty auger with Hardox flights
- Heavy duty bearing assembly providing exceptional support for the auger shaft preventing any loads being transferred to the drive motor gearbox
- Hardox shearing plate on entry into compaction zone.

ALL maintenance can be carried out in situ supporting totex

- Quick release drain deck tray with Bauer coupling connection
- Hard wearing brush assembly
- Optimised run times
- Low operating costs.

Installation

- Prefabricated offsite
- True 'plug and play' concept
- Minimal onsite requirements - launder connection, power and flat concrete plinth in most cases.

Optional

Additional washing facility 1-2 l/s - wash water required *(pictured bottom left)*.

Optional maintenance rail to allow removal of auger, bearing assembly and geared motor *(pictured top left)*

KEY FACTS

Services required: Zero external wash water for standard configuration.

Capacity: 4m³/hr of wet screenings with up to 8 l/sec of launder wash water.

Typical electric motor drive size: 3.0kW.

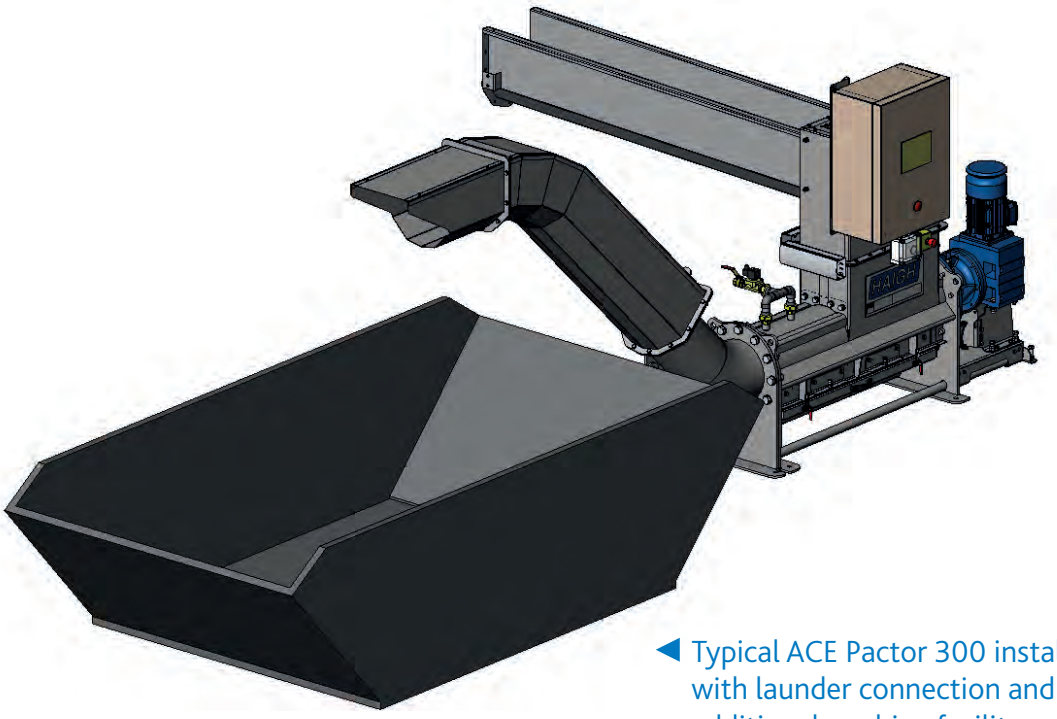

◀ Typical ACE Pactor 300 installation with launder connection and optional additional washing facility.

SALES AND SERVICE SUPPORT

Haigh Engineering has a UK wide dedicated sales force who specialise in knowing how to bring added value to your works such as reducing civil costs, reducing the need for site washwater and cutting screenings skip and transport costs.

Your local Sales Manager will be pleased to discuss your particular requirements and options for Haigh equipment to suit your works. If you decide to proceed with a Haigh installation a dedicated Contracts Engineer will be appointed to your project to oversee it from start to finish.

Installation can be undertaken by Haigh trained engineers and electricians who have in many cases served their apprenticeships with the Company - nobody knows Haigh products like we do.

INSTALLATION DRAWING

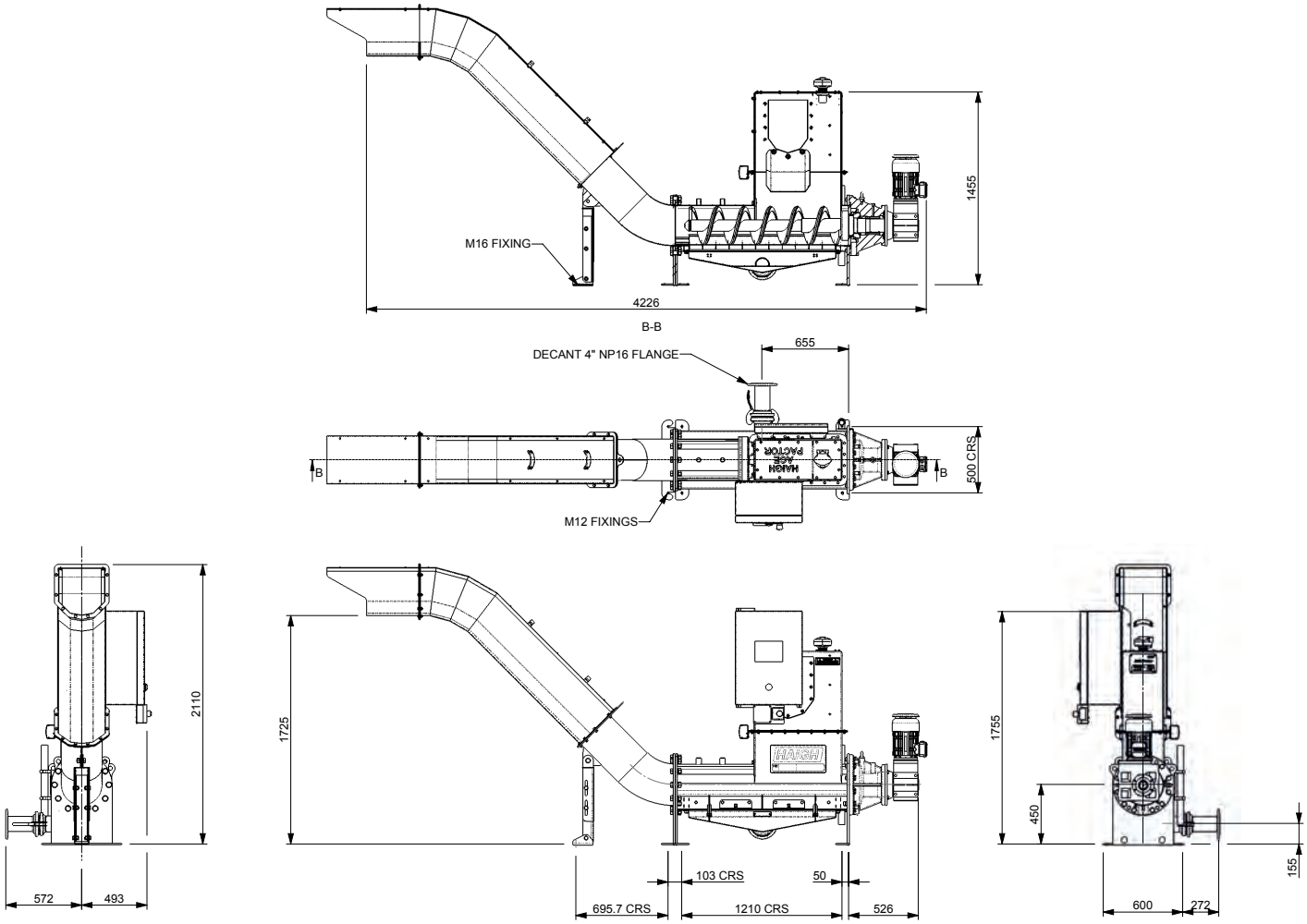

The Haigh Engineering Company Ltd

Alton Road, Ross-on-Wye, Herefordshire HR9 5NG

Tel: +44(0)1989 763 131

info@haigh.co.uk

www.haigh.co.uk

Made in UK

E5026